NATIONAL
CUSTOM HOLLOW METAL DOORS & FRAMES
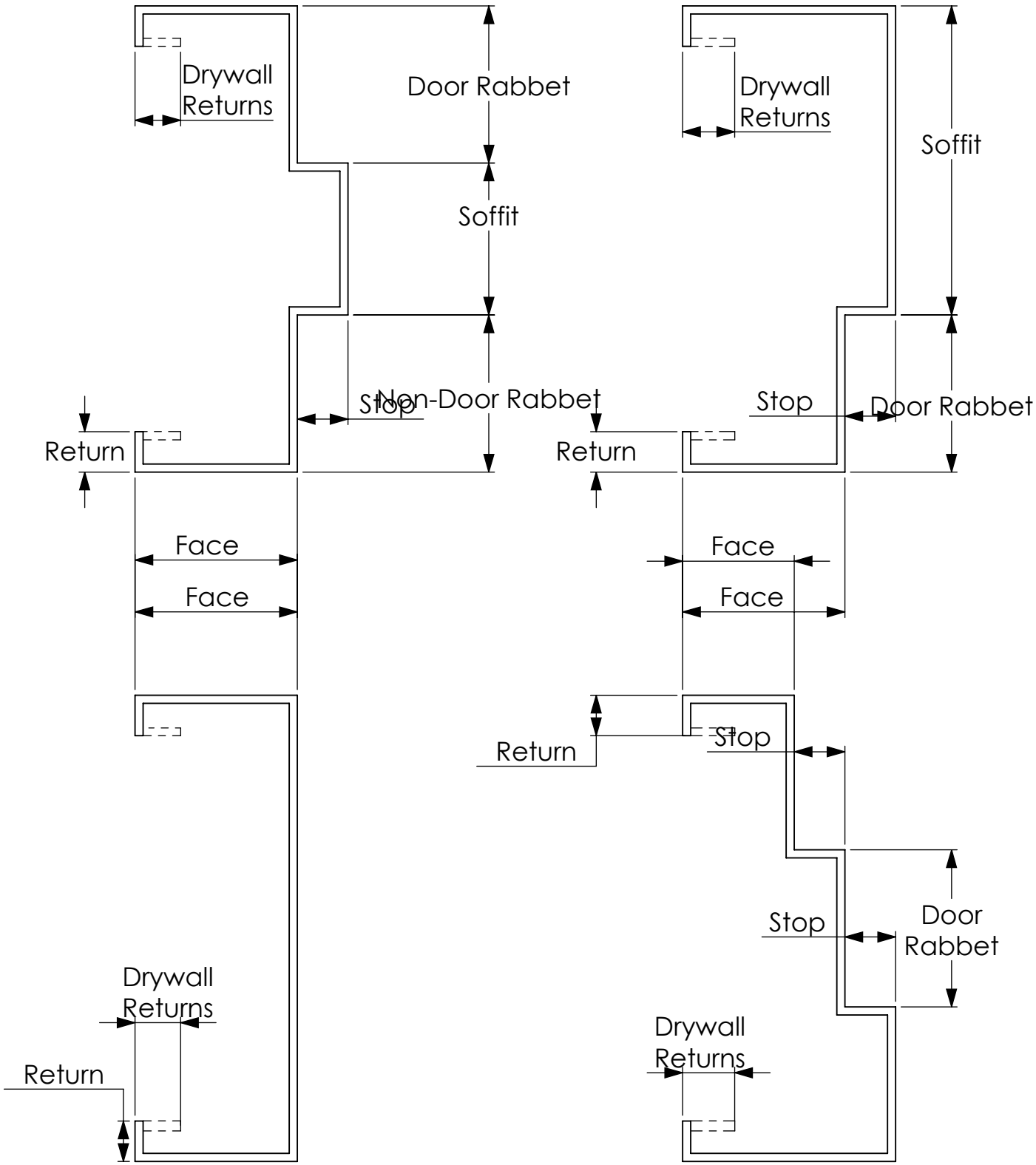
Profile Nomenclature